IF2140 – Pemodelan Basis Data / IF2240 – Basis Data

SQL (Part 2)

©2020 - Tim Pengajar IF2140 Semester I TA 2023/2024

KNOWLEDGE & SOFTWARE ENGINEERING

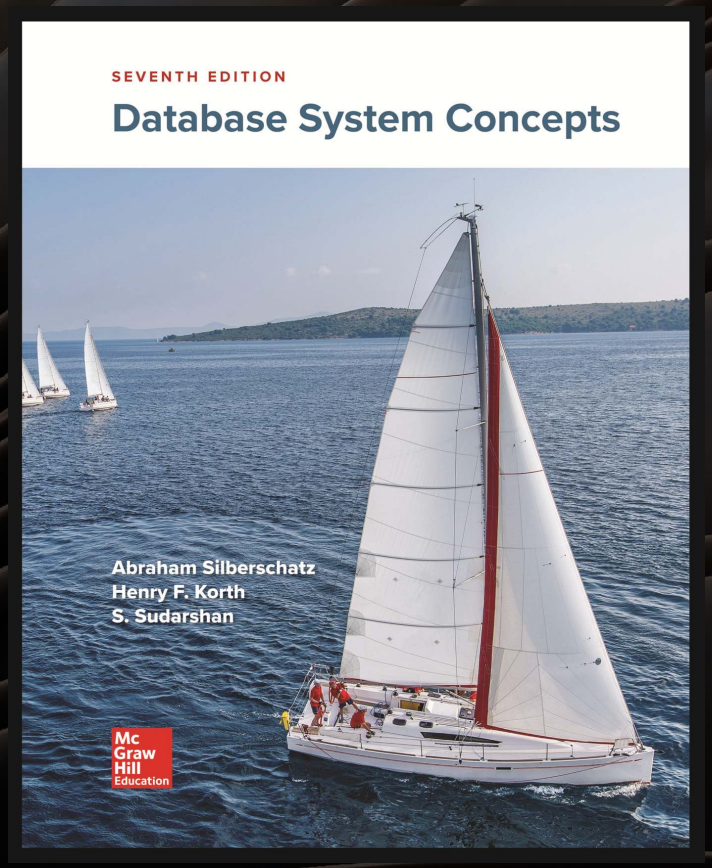

Sumber

Silberschatz, Korth, Sudarshan: "Database System Concepts", 7th Edition

- Chapter 3 : Introduction to SQL

©2022 - Tim Pengajar IF2140 Pemodelan Basis Data

Schema Diagram

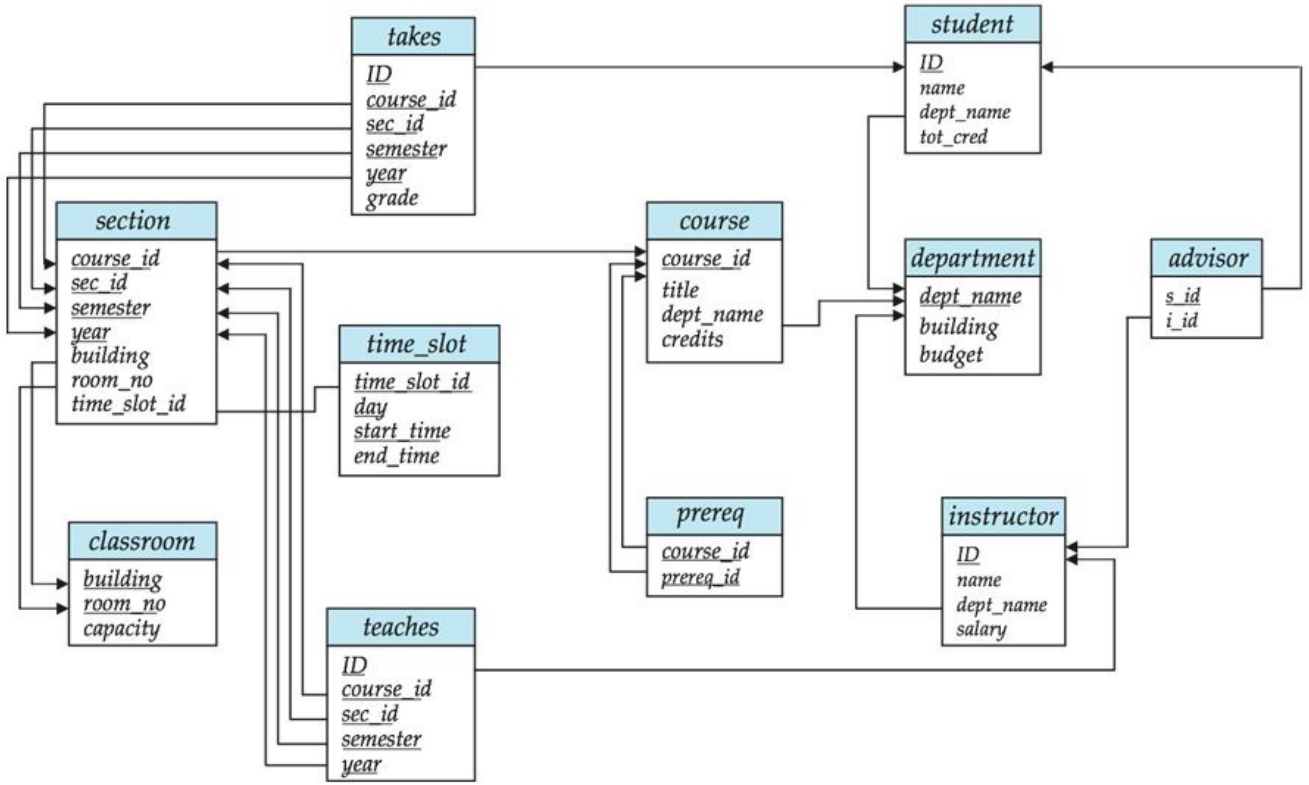

Aggregate Functions

These functions operate on the multiset of values of a column of a relation, and return a value

avg: average value
min: minimum value
max: maximum value
sum: sum of values
count: number of values

©2022 - Tim Pengajar IF2140 Pemodelan Basis Data
KNOWLEDGE & SOFTWARE ENGINEERING

Aggregate Functions Examples

Find the average salary of instructors in the Computer Science department

- **select avg** (*salary*)
  from *instructor*
  where *dept_name*= 'Comp. Sci.';

Find the total number of instructors who teach a course in the Spring 2018 semester

- **select count** (**distinct** *ID*)
  from *teaches*
  where *semester* = 'Spring' **and** *year* = 2018;

Find the number of tuples in the *course* relation

- **select count** (*)
  from *course*;

©2022 - Tim Pengajar IF2140 Pemodelan Basis Data
KNOWLEDGE & SOFTWARE ENGINEERING

Aggregate Functions – Group By

Find the average salary of instructors in each department

- select *dept_name*, avg (*salary*) as *avg_salary*
  from *instructor*
  group by *dept_name*;

ID	*name*	*dept_name*	*salary*
76766	Crick	Biology	72000
45565	Katz	Comp. Sci.	75000
10101	Srinivasan	Comp. Sci.	65000
83821	Brandt	Comp. Sci.	92000
98345	Kim	Elec. Eng.	80000
12121	Wu	Finance	90000
76543	Singh	Finance	80000
32343	El Said	History	60000
58583	Califieri	History	62000
15151	Mozart	Music	40000
33456	Gold	Physics	87000
22222	Einstein	Physics	95000

dept_name	*avg_salary*
Biology	72000
Comp. Sci.	77333
Elec. Eng.	80000
Finance	85000
History	61000
Music	40000
Physics	91000

©2022 - Tim Pengajar IF2140 Pemodelan Basis Data
KNOWLEDGE & SOFTWARE ENGINEERING

Aggregation (Cont.)

Attributes in **select** clause outside of aggregate functions must appear in **group by** list

- /* erroneous query */
  select *dept_name*, *ID*, **avg** (*salary*)
  from *instructor*
  group by *dept_name*;

©2022 - Tim Pengajar IF2140 Pemodelan Basis Data
KNOWLEDGE & SOFTWARE ENGINEERING

Aggregate Functions – Having Clause

Find the names and average salaries of all departments whose average salary is greater than 42000

```
select dept_name, avg (salary) as avg_salary
from instructor
group by dept_name
having avg (salary) > 42000;
```

Note: predicates in the **having** clause are applied after the formation of groups whereas predicates in the **where** clause are applied before forming groups

©2022 - Tim Pengajar IF2140 Pemodelan Basis Data